DWG. NO. SF-000-6x10-D2

6' x 10' FOOTBATH

Weight: 4020 LBS
Max Fill Capacity: 300 gal
Depth: 8"
Outer Dimensions: 6' x 10' x 7' 8-3/8"

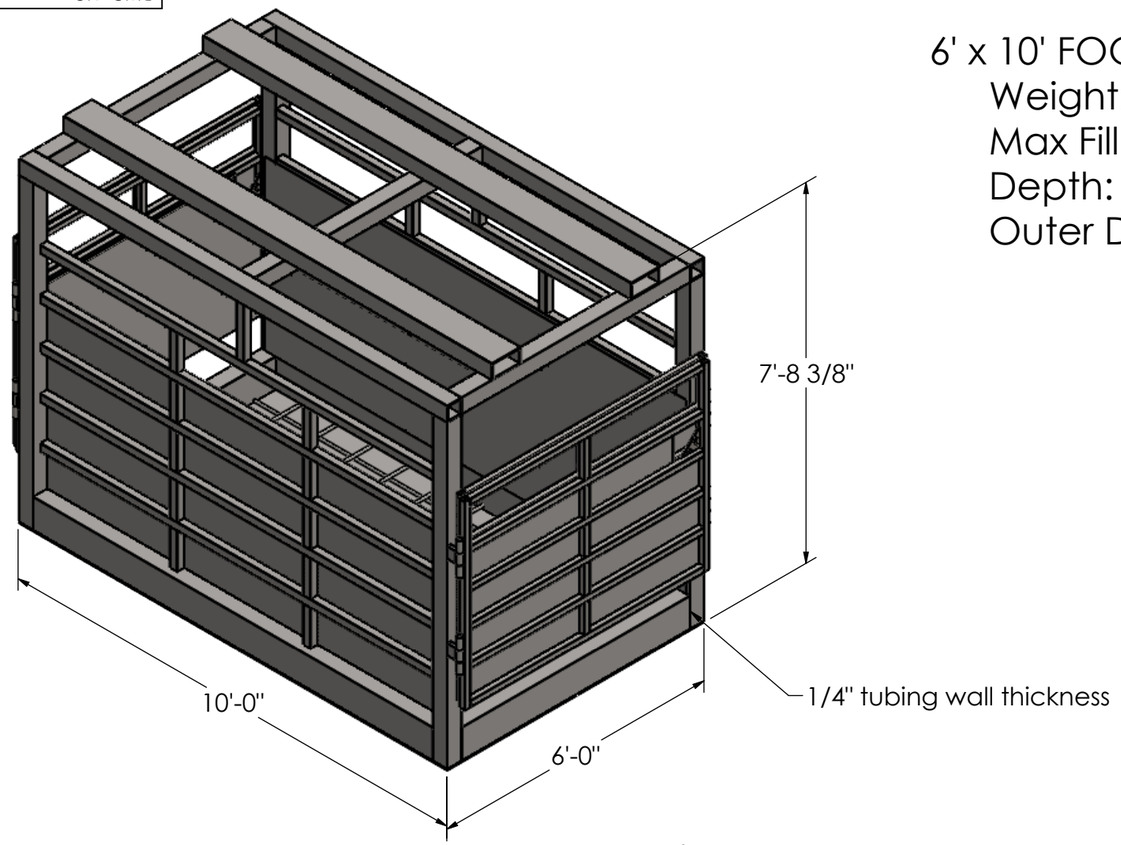

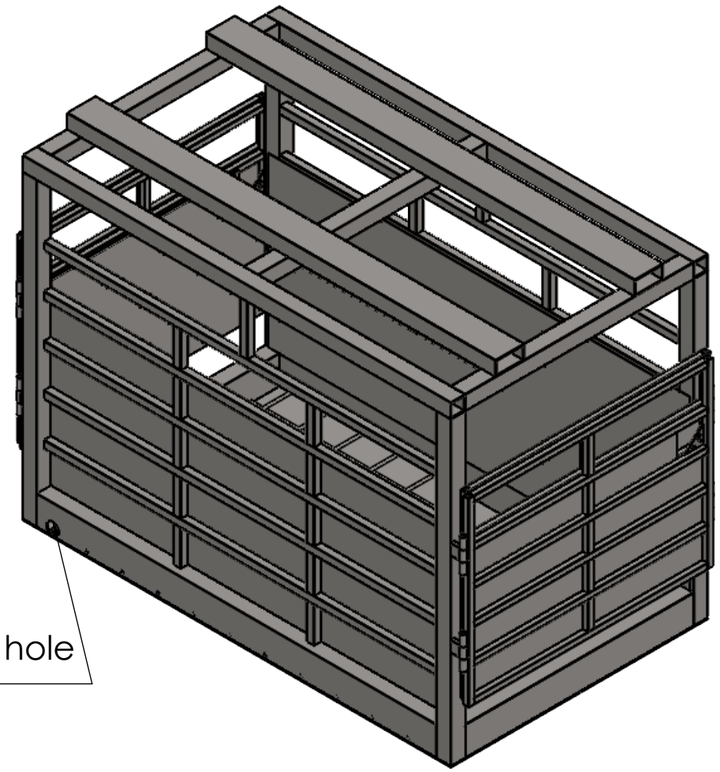

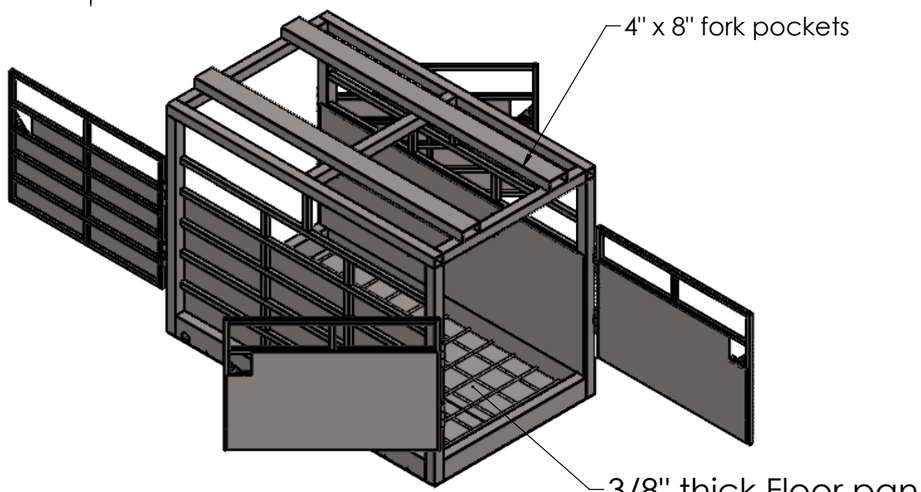

UNLESS OTHERWISE SPECIFIED: TOLERANCES: .X ±.1 .XX ±.03 .XXX ±.005 ANGULAR: ±1° FRACTIONAL: ±1/8 UPSPECIFED RADII: ±.03 **DIMENSIONS ARE IN INCHES**	INFORMATION CONTAINED IS PROPRIETARY & CONFIDENTIAL DATA OF B&B GATES AND SUPPLY. NO DISCLOSURE, COPY, OR USE OF ANY PART MAY BE MADE WITHOUT WRITTEN PERMISSION.		
	B&B GATES AND SUPPLY INC. 3087 250TH St. Doon, IA 51235 712-726-2404		
WEIGHT 4020 LBS	DESCRIPTION 6' x 10' Footbath		
FINISH	DRAWN	DWG. NO. **SF-000-6x10-D2**	REV.
MATERIAL MS	THIRD ANGLE	SCALE: 1:48 DO NOT SCALE DRAWING	SHEET 1 OF 1